	MATERIAL	SURFACE PROTECTION
I	JED-051 M5/Fe	JED-256/Zn/C
II	17H /Fe	JED-256/Zn/C
III	JED-029 M1/Al	JED-259/C
IV	JED-005 M1/POM	
V	JED-051 M1/Fe	JED-256/Zn/C

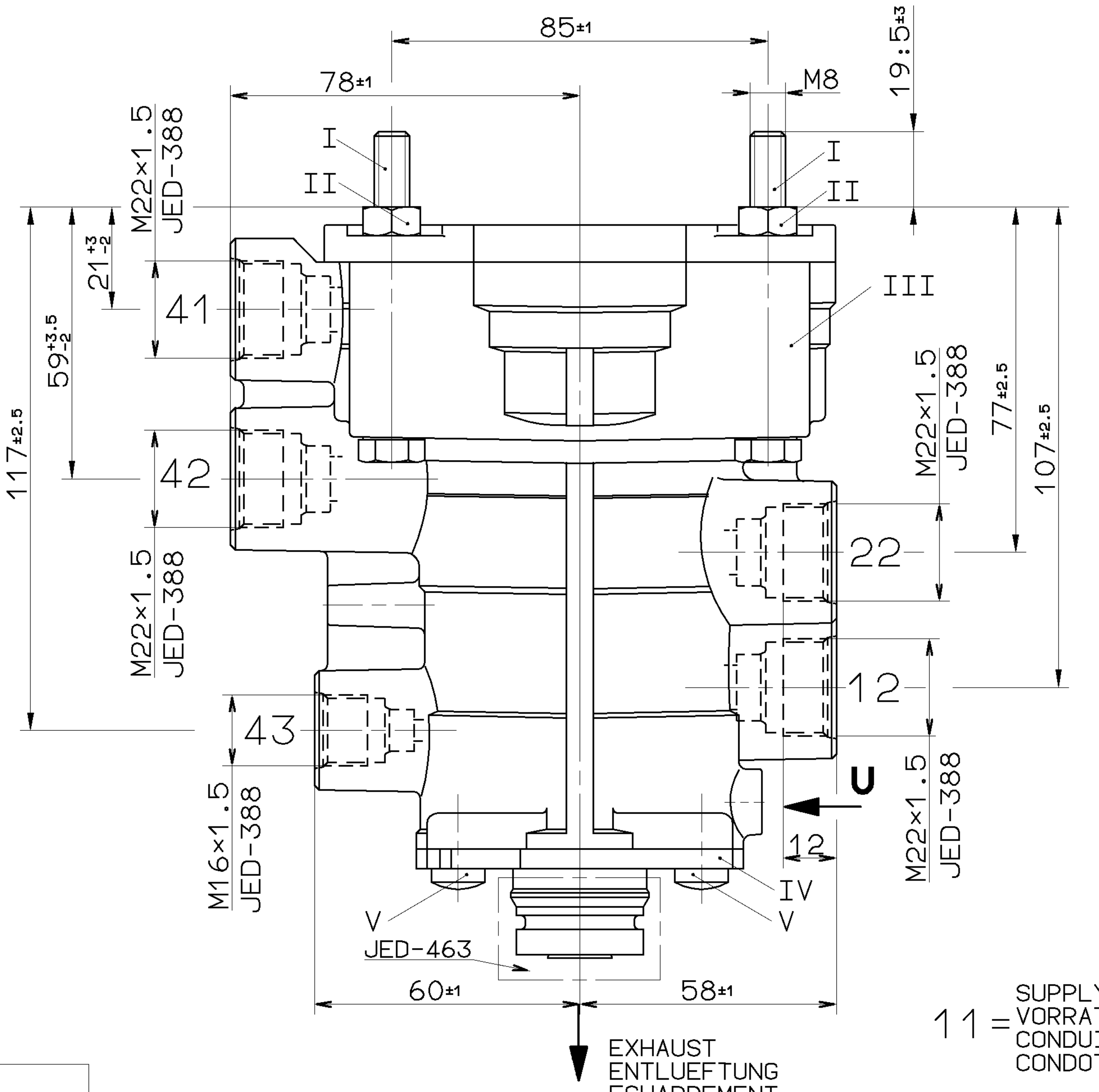

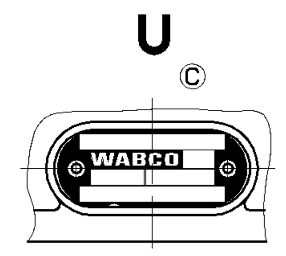

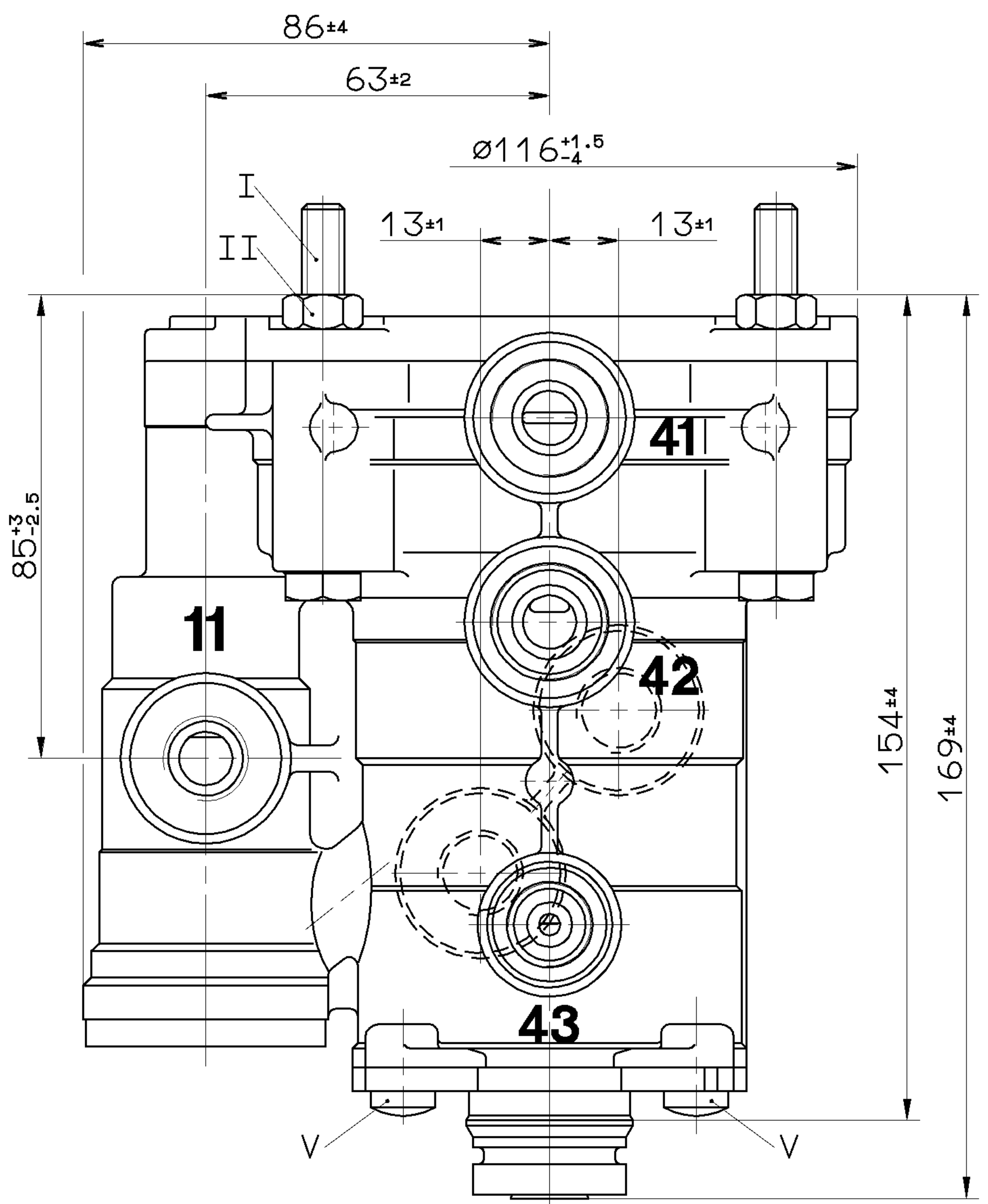

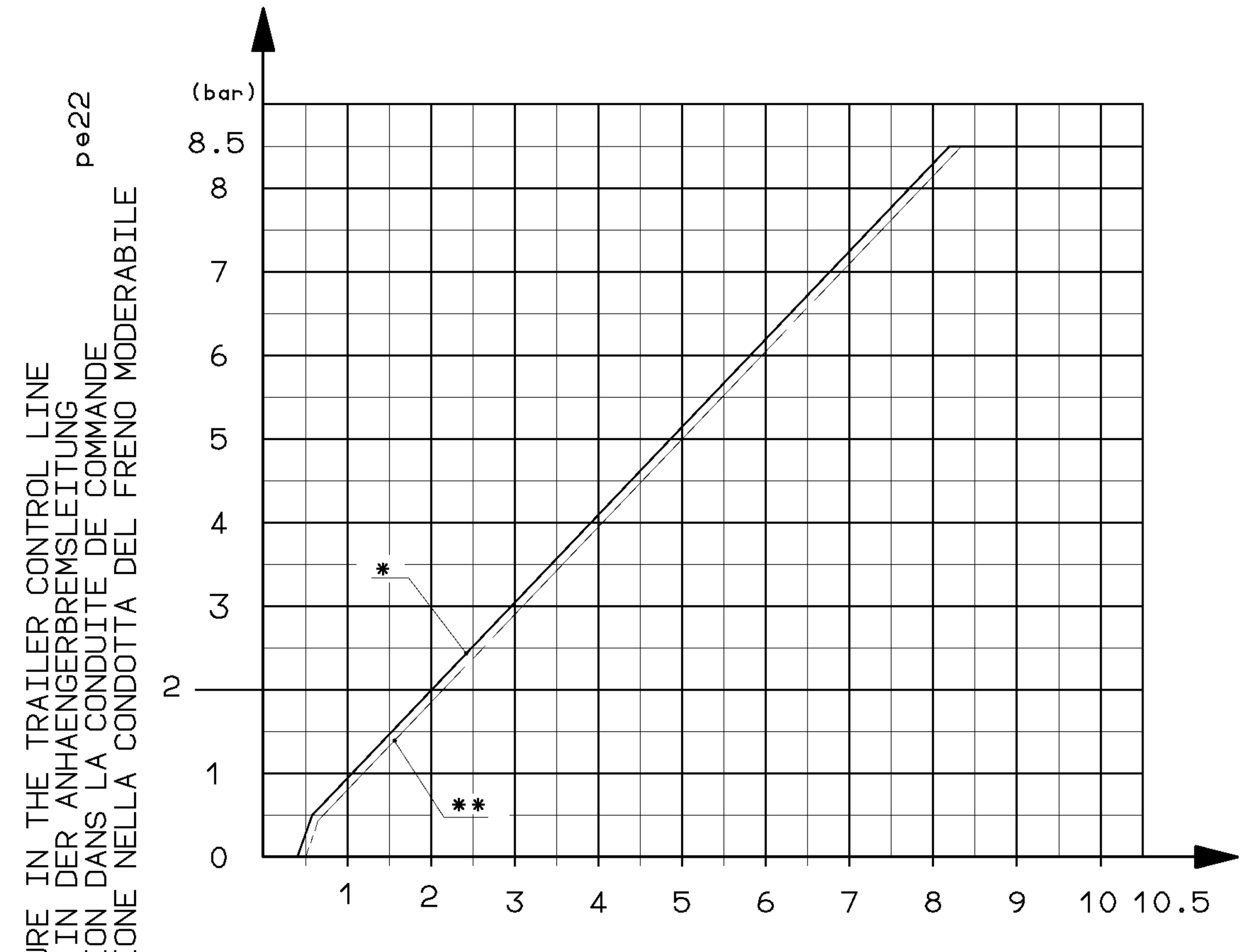

PRESSURE IN THE SERVICE BRAKE LINE pe41,pe42
DRUCK IN DER BETRIEBSBREMSLEITUNG
PRESSION DANS LA CONDUITE DE FREIN DE SERVICE
PRESSIONE NELLA CONDOTTA DEL FRENO DI SERVICIO

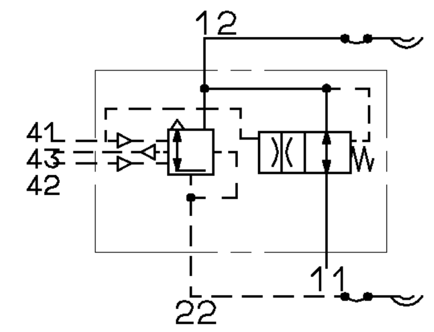

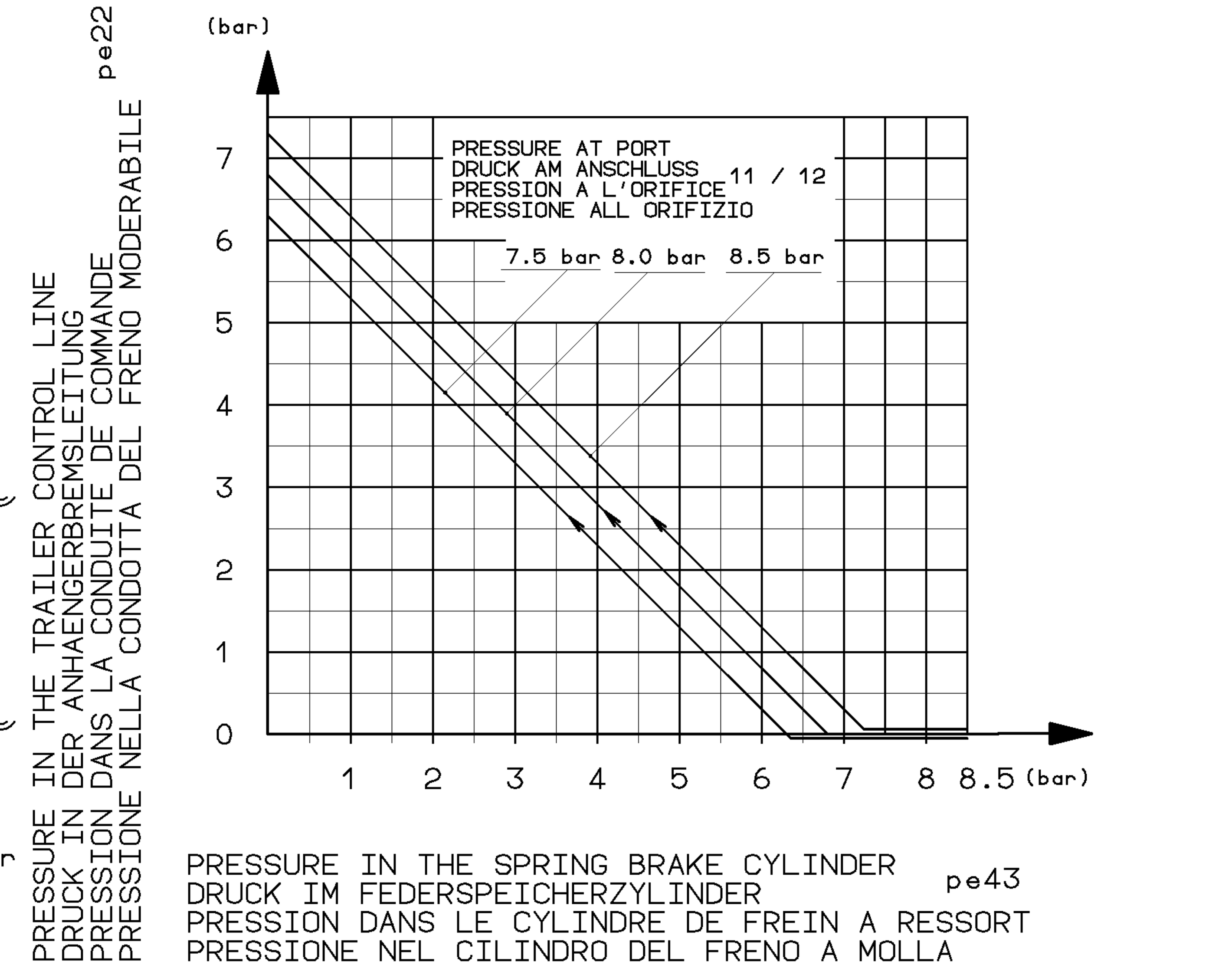

PRESSURE IN THE SPRING BRAKE CYLINDER pe43
DRUCK IM FEDERSPEICHERZYLINDER
PRESSION DANS LE CYLINDRE DE FREIN A RESSORT
PRESSIONE NEL CILINDRO DEL FRENO A MOLLA

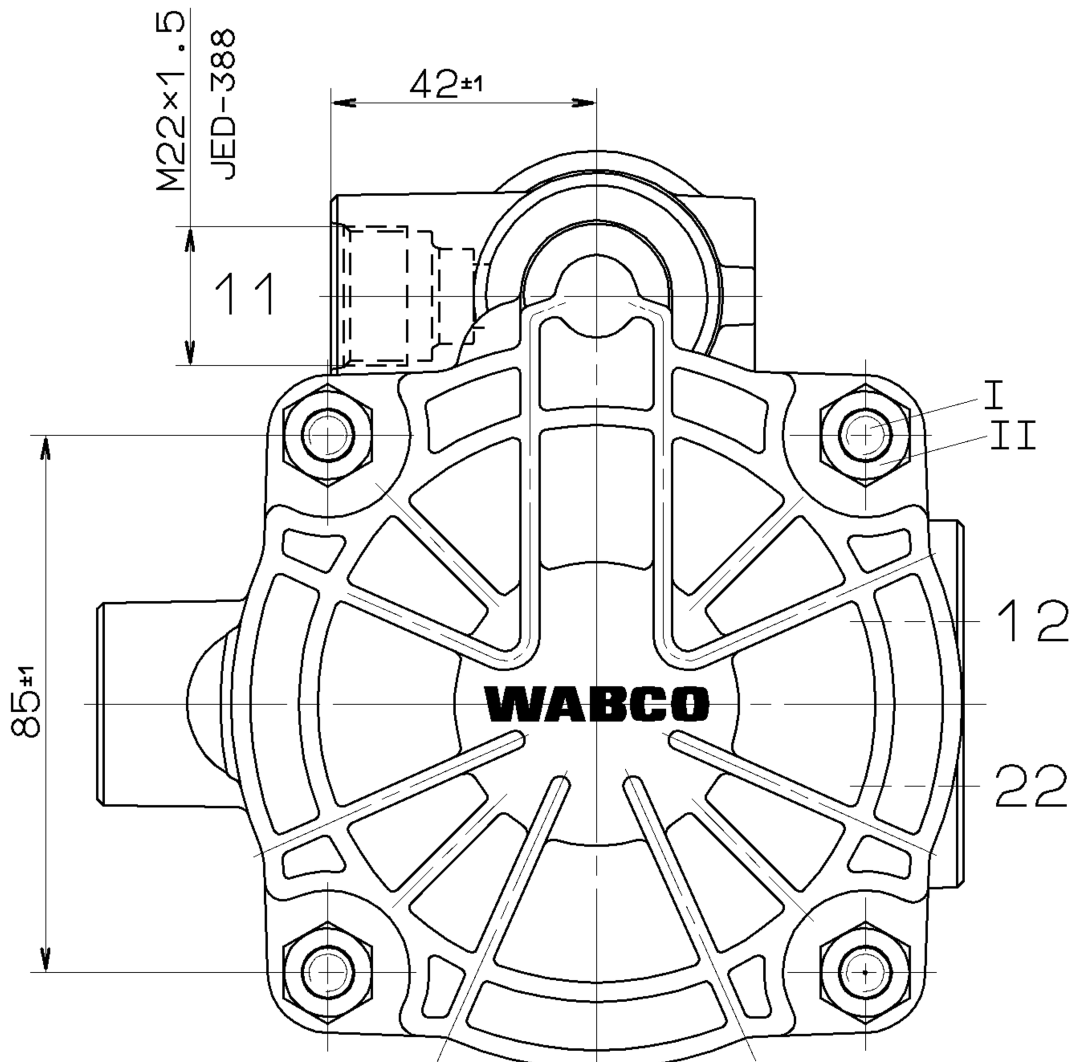

11 = SUPPLY LINE INLET
VORRATSLEITUNG ZUFLUSS
CONDUITE D'ALIMENTATION ENTREE
CONDOTTA DI ALIMENTAZIONE ENTRATA
MAX.pe=8.5 bar
TEMPORARILY / KURZZEITIG / DE COURTE DUREE / BREVE TEMPO SOLO MAX.pe=10.5 bar

12 = SUPPLY LINE
VORRATSLEITUNG
CONDUITE D'ALIMENTATION
CONDOTTA DI ALIMENTAZIONE

22 = BRAKING LINIE TO THE TRAILER
BREMSLEITUNG ZUM ANHAENGER
CONDUITE DE FREINAGE A LA REMORQUE
CONDOTTA DI FRENATURA AL RIMORCHIO
(pe 22)

41 = SERVICE BRAKING SYSTEM (CIRCUIT 1)
BETRIEBSBREMSANLAGE (KREIS 1)
DISPOSITIF DE FREINAGE DE SERVICE (CIRCUIT 1)
DISPOSITIVO DI FRENATURA DI SERVIZIO (CIRCUITO 1)
MAX.pe =10.5 bar
TEMPORARILY / KURZZEITIG / DE COURTE DUREE / BREVE TEMPO SOLO MAX.pe=12.5 bar

42 = SERVICE BRAKING SYSTEM (CIRCUIT 2)
BETRIEBSBREMSANLAGE (KREIS 2)
DISPOSITIF DE FREINAGE DE SERVICE (CIRCUIT 2)
DISPOSITIVO DI FRENATURA DI SERVIZIO (CIRCUITO 2)
MAX.pe=10.5 bar
TEMPORARILY / KURZZEITIG / DE COURTE DUREE / BREVE TEMPO SOLO MAX.pe=12.5 bar

43 = PARKING BRAKING SYSTEM
FESTSTELLBREMSANLAGE
DISPOSITIF DE FREINAGE DE STATIONNEMENT
DISPOSITIVO DI FRENATURA DI STAZIONAMENTO
(pe 43)
WORKING PRESSURE: / BETRIEBSDRUCK: / PRESSION DE SERVICE: / PRESSIONE DI SERVIZIO: MAX.pe =8.5 bar
TEMPORARILY / KURZZEITIG / DE COURTE DUREE / BREVE TEMPO SOLO MAX.pe=10 bar

* CHARACTERISTIC: BRAKING SYSTEM OK OR FAILURE OF CIRCUIT 2
KENNLINIE: INTAKTE BREMSANLAGE BZW AUSFALL VON KREIS 2
COURBE CARACTERISTIQUE: DISPOSITIF DE FREINAGE INTACT OU DEFAILLANCE DE CIRCUIT 2
CURVA CARATTERISTICA: DISPOSITIVO DI FRENATURA INTATTO O DIFETTO DEL CIRCUITO 2
MAX.pe11=8.5 bar

** CHARACTERISTIC: FAILURE OF CIRCUIT 1
KENNLINIE: AUSFALL VON KREIS 1
COURBE CARACTERISTIQUE: DEFAILLANCE DU CIRCUIT 1
CURVA CARATTERISTICA: DIFETTO DEL CIRCUITO 1
MAX.pe11=8.5 bar

THERMAL RANGE OF APPLICATION:
THERMISCHER ANWENDUNGSBEREICH: -40°C...+80°C
APPLICATION THERMIQUE:
CAMPO DI APPLICAZIONE THERMICA:

MEDIUM: AIR
MEDIUM: LUFT
FLUIDE: AIR
FLUIDO: ARIA

INSTALLATION POSITION: EXHAUST SHOWN AT BASE (AXIS CENTRE OF THE DEVICE DEVIATES MAX 90° FROM VERTICAL)
EINBAULAGE: ENTLUEFTUNG NACH UNTEN (MITTELACHSE DES GERAETES MAX 90 ° VON DER SENKRECHTEN ABWEICHEND)
POSITION D'INSTALLATION: ECHAPPEMENT VERS LE BAS (ECART DE L'AXE MEDIAN DE L'APPAREIL PAR RAPPORT A LA VERTICALE: 90° MAX.)
POSIZIONE DI MONTAGGIO: SCARICO VERSO IL BASSO (DEVIAZIONE ASSE APPARECCHIO RISPETTO ALLA VERTICALE:MAX.90°)

TOUTE COMMUNICATION OU REPRODUCTION DE CE DOCUMENT, TOUTE EXPLOITATION OU COMMUNICATION DE SON CONTENU SONT INTERDITES, SAUF AUTORISATION EXPRESSE. TOUT MANQUEMENT A CETTE REGLE CONSTITUE UN ABUS EVIDENT ET EXPOSE SON AUTEUR AU VERSEMENT DE DOMMAGES ET INTERETS. TOUS DROITS DE PROPRIETE INDUSTRIELLE RESERVES. NOTAMMENT EN MATIERE DE BREVETS ET DE MODELES.
NON E PERMESSO CONSEGNARE A TERZI O RIPRODURRE QUESTO DOCUMENTO, NE UTILIZZARNE IL CONTENUTO O RENDERLO COMUNQUE NOTO A TERZI SENZA AUTORIZZAZIONE ESPLICITA. OGNI INFRAZIONE COSTITUIRA UN EVIDENTE ABUSO E COMPORTERA IL RISARCIMENTO DEI DANNI SUBITI. E'FATTA RISERVA DI TUTTI I DIRITTI DERIVANTI DA BREVETTI O MODELLI.
WEITERGABE SOWIE VERVIELFAELTIGUNG DIESER UNTERLAGE, VERWERTUNG UND MITTEILUNG IHRES INHALTS NICHT GESTATTET, SOWEIT NICHT AUSDRUECKLICH ZUGESTANDEN. ZUWIDERHANDLUNGEN STELLEN EINEN OFFENSICHTLICHEN MISSBRAUCH DAR UND VERPFLICHTEN ZU SCHADENERSATZ. ALLE RECHTE FUER DEN FALL DER PATENTERTEILUNG ODER GEBRAUCHSMUSTER-EINTRAGUNG VORBEHALTEN.
COPYING OF THIS DOCUMENT AND GIVING IT TO OTHERS AND THE USE OR COMMUNICATION OF THE CONTENTS THEREOF, ARE FORBIDDEN WITHOUT EXPRESS AUTHORITY. CONTRAVENTION OF THIS RESTRICTION WILL CONSTITUTE AN EVIDENT ABUSE AND RESULT IN A LIABILITY TO THE PAYMENT OF DAMAGES. ALL RIGHTS ARE RESERVED IN THE EVENT OF THE GRANT OF PATENT OR REGISTRATION OF A UTILITY MODEL OR DESIGN. THIS DOCUMENT IS THE SUBJECT OF COPYRIGHT.

GENERAL SPECIFICATION: JED-334						
FURTHER TECHNICAL DATA:						
DOC. CODE:		SHEET: TO				
GENERAL TOLERANCES						
CLASS 1)		RANGE OF NOMINAL DIMENSIONS (± mm)				
		≤50	> 50 ≤180	>180 ≤400	>400	
FINE		0,5	1,0	1,5	2,0	± 3°
MEDIUM		1,0	2,0	3,0	4,0	
COARSE		2,0	3,5	5,0	6,5	
TAPPED HOLES ACC. ISO 4039 / JED-152						
1) TOLERANCE CLASS APPLIED CROSSMARKED						

DCN-NO.	REV.	DATE
069408	1×C	98-12-01
054766	1×B	95-08-18

CADAM-DRAWING COPYRIGHT

DATE	SIGNATURE
DRAWN:	
95-08-18	MEINKING
CHECKED:	
95-08-18	GROETZ.
STANDARDIZATION:	

WABCO

TRAILER CONTROL VALVE
ANHAENGER-STEUERVENTIL
VALVE DE COMMANDE DE REM.
VALVOLA DI COMANDO FR.RI.

MASS	SCALE	PRODUCT IDENTIFICATION NO.	DOC. CODE	SHEET
KG	1:1 2:1	973 009 006 0	605	1/1
SIZE	T.R.I.	SHAPE CODE	REPLACEMENT FOR	
A 1	140		973 009 006 0 OF 93-10-03 (B)	

100mm

EXPERT CODE 7 3 9

PRODUCT TYPE 0 0 X

1909/016/3/04.93

605/653